

PILAR

Item code	86.OC01.3321.01
Product type	Outdoor
Category	Surface Ceiling Downlight
Family	PILAR
Pictograms	

Dimensions	
Product dimensions (mm)	113x113x120 mm

Scheme

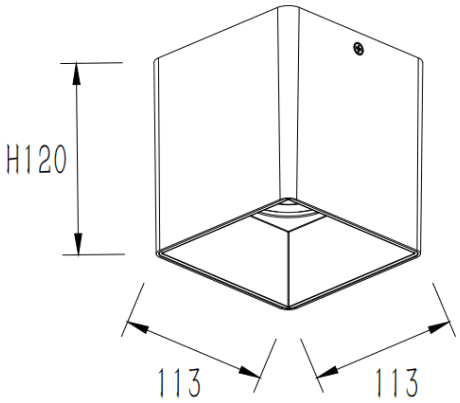

Product	
Real power (W)	35
Real luminous flux (Lm)	2800
Luminous efficiency (Lm/W)	80
Beam angle (º)	40
Life time (h)	50000h L80B10
IP	IP65
Control gear	ON-OFF
Colour temperature (K)	3000
Colour consistency (SDCM)	SDCM3
CRI	80